CMV SHARPER FINISH, INC.

FLATWORK IRONER INSTALLATION and OPERATION INSTRUCTIONS

KEEP THIS MANUAL FOR FUTURE REFERENCE
FOR SERVICE – CALL YOUR LOCAL DISTRIBUTOR

MODELS COVERED

MINI RITE	**MODEL 2000**
FINISH RITE	**FINISH MASTER 2000**
IMPRESS 950	**MODEL 2400**
GLIDER	**FINISH MASTER 2400**
MODEL 1200	**MODEL 3000**
MODEL 1600	**FINISH MASTER 3000**
FINISH MASTER 1600	**MODEL 3600**

CMV SHARPER FINISH, INC.
4500 Augusta Boulevard • Chicago, Illinois 60651 U.S.A.
Phone (773) 276-4800 • Fax (773) 276-6878
www.cmvsharperfinish.com

DO NOT USE SOFTENER ON FLATWORK

WAX EVERY DAY

CMV 120205

Product Information:

Model #: _____

Serial #: _____

IMPORTANT

An Ironer that is not vented properly may cause a variety of operational problems. You must vent an Ironer so that the exit CFM airflow is about the same as the blower CFM airflow. Ironers are very warm to the touch, but should not be scalding. If the Ironer is very, very hot – most likely it is not vented properly. (Consult the factory if there are any questions.)

Before starting the Ironer, make sure all belts/pulleys/chains are aligned, and all set-screws, etc., are tightened properly.

Also, your feed ribbons may "shrink" in the first months +/- of operation. If your feed ribbons get tight (no 1" play), you must adjust the feed ribbon drive roll accordingly.

Finally, check to see if the "thermostatic shoe" and "high limit shoe" are not laying on the cylinder too strong (from shipment; replacement; etc.). With power off, lift up on the spring loaded arms to reduce tension, and gingerly let the shoe(s) lay back on the cylinder.

TABLE OF CONTENTS

INTRODUCTION

CAUTION **WARNING** **DANGER**

THESE SYMBOLS ALERT READER TO SITUATIONS THAT COULD CAUSE PERSONAL INJURY, AND ARE SHOWN HERE IN INCREASING LEVELS OF HAZARD SERIOUSNESS.

FOR YOUR SAFETY:

WARNING

DO NOT STORE OR USE GASOLINE OR OTHER FLAMMABLE VAPORS AND LIQUIDS IN THE VICINITY OF THIS OR ANY OTHER APPLIANCE.

IMPORTANT: PURCHASER MUST CONSULT THE LOCAL GAS SUPPLIER FOR SUGGESTED INSTRUCTIONS TO BE FOLLOWED IF THE IRONER USER SMELLS GAS. THE GAS UTILITY INSTRUCTIONS PLUS THIS WARNING NOTE MUST BE POSTED IN A PROMINENT LOCATION NEAR THE IRONER.

WHAT TO DO IF YOU SMELL GAS:

1. Open windows.
2. Do not touch electric switches; do not use any phone in your building.
3. Extinguish any open flame.
4. Do not try to light any appliance.
5. Clear the room, building or area of all occupants.
6. Immediately call your gas supplier from a neighbor's phone. Follow the gas supplier's instructions.
7. If you cannot reach your gas supplier, call the Fire Department.

Installation and service must be performed by a qualified installer, service agency or the gas supplier.

WARNING

FAILURE TO INSTALL, MAINTAIN, AND/OR OPERATE THIS MACHINE ACCORDING TO THE MANUFACTURERS INSTRUCTION MAY RESULT IN CONDITIONS WHICH CAN PRODUCE BODILY INJURY AND/OR PROPERTY DAMAGE.

DO NOT REPAIR OR REPLACE ANY PART OF THE IRONER OR ATTEMPT ANY SERVICING UNLESS SPECIFICALLY RECOMMENDED OR PUBLISHED IN THESE MANUALS THAT YOU UNDERSTAND AND HAVE THE SKILLS TO CARRY OUT.

WHENEVER GROUND WIRES ARE REMOVED DURING SERVICING, THOSE GROUND WIRES MUST BE RECONNECTED TO ENSURE THAT THE IRONER IS PROPERLY GROUNDED AND TO REDUCE THE RISK OF FIRE, ELECTRICAL SHOCK, OR PERSONAL INJURY.

NOTE: The WARNING and IMPORTANT instructions appearing in this manual are not intended to cover all possible conditions and situations that may occur. IT MUST BE UNDERSTOOD THAT COMMON SENSE, CAUTION, AND CAREFULNESS ARE FACTORS THAT CANNOT BE BUILT INTO THESE IRONERS. THESE FACTORS MUST BE SUPPLIED BY THE PERSON(S) INSTALLING, MAINTAINING, OR OPERATING THE IRONER.

IMPORTANT: DURING THE LIFETIME OF THE IRONER, IT WILL REQUIRE SERVICE. THE INFORMATION CONTAINED IN THE MANUALS IS WRITTEN AND INTENDED FOR USE BY QUALIFIED SERVICE TECHNICIANS WHO ARE FAMILIAR WITH THE SAFETY PROCEDURES REQUIRED IN THE REPAIR OF YOUR IRONER, AND WHO ARE EQUIPPED WITH THE PROPER TOOLS AND TESTING EQUIPMENT.

Repairs that are made to your ironer by unqualified persons can result in hazards due to improper assembly or adjustments subjecting you, or the inexperienced person making such repairs, to the risk of injury or electrical shock which can be serious or even fatal.

If you or an unqualified person perform service on your ironer, you must assume the responsibility for any personal injury or property damage, which may result. The manufacturer will not be responsible for any injury or property damage arising from improper service and/or service procedure.

TO PREVENT POSSIBLE EQUIPMENT DAMAGE, PLEASE OBSERVE THE FOLLOWING:

1. Check alignment of any pulleys and sprockets. Tighten any set screws, etc. that may have loosened during shipment.
2. Careless handling can damage pressure roll padding. Use care in removal of protective page wrap and wood positioning blocks.
3. Prolonged heat build-up within the machine can shorten the life of ribbons, roll pads, and other components. Use complete shutdown procedure even for brief breaks and work stoppages.
4. Gaskets may be damaged by use and/or disassembly procedure, causing breakage and failure if reused. Replace with new gaskets.
5. High temperatures generated by gas heated ironers impose severe stress on mechanical components. Use only heat resistant grease for lubrication of bearings. Make sure the ironer is vented properly.
6. This flatwork ironer is designed to process flatwork across its entire heated roll and continued use of less than the full surface will allow hot spots to develop. To avoid waste and damage, use as much of the heated roll as possible.
7. Lint or other debris entering the burner assembly of gas heated ironers will clog burner orifices and ports which will impair or shut down operation.
8. The thermostat sensing element must be kept clean and in proper position and operating condition to prevent damage to machine and work. An out-of-position or lint-fouled thermostat sensing element will result in overheating.
9. Always use flatwork wax to protect heated roll and thermostat contact shoe from damage. Do not over wax machine. Over or under waxing will cause flatwork to stick to roll and scorch. Over waxing will also cause build-up on heated cylinder, compression roll cover, ribbons, and flatwork.
10. Do not sit or stand on any receiving tables, conveyors, or the canopy because they are not designed to support your weight.
11. If machine will be inactive for 30 days or more, block up the compression roll of the heated cylinder.
12. Do not fold linen to be ironed more than once.

IMPORTANT SAFETY INSTRUCTIONS

Please read before use. Copy and post near the ironer for future reference. ANSI Z8.1 1990 Standards require that employees be properly instructed on the hazards of their work and on safe practices by bulletins, printed rules, verbal instructions, or periodic safety meetings.

1. Electricity, heat, and pressure are present in potentially harmful quantities in an operating ironer. Never attempt repairs on a machine during operation. Always disconnect, lock, and tag power sources before working on the machine.

2. If material is caught or jammed in an operating machine, shut down the machine immediately. Do not attempt to remove jammed material from an operating machine. Disconnect power at the circuit box, lock and tag before removing material from machine. Be sure machine is cool before attempting to remove jammed material.

3. Faulty finger guard operation exposes operator to needless hazard. Never operate an ironer without properly functioning safety finger guard and safety finger switch. Do not allow fingers, hands, or foreign objects to pass under or behind the finger guard. Serious injury can result.

4. Gas used as fuel by gas heated ironers is extremely flammable. Be sure ironer gas supply is shut off, locked and tagged before attempting installation or repair work.

5. High temperatures generated by ironers can cause painful bums. Avoid contact with heated surfaces.

6. Gas used as fuel by gas heated ironers is extremely flammable. Make sure all connections are tight and leak proof before attempting to start or operate machine. Test with soapy solution. To reduce risk of fire or explosion, do not use an open flame to check for gas leaks.

7. To reduce the risk of fire, do not place any type of material on heated surfaces as these heated surfaces become extremely hot.

8. To reduce the risk of fire or explosion, never store or use gasoline, chemicals, or other flammable vapors or liquid in the vicinity of this or any other machine.

9. Provide adequate make-up air for gas heated machines according to local requirements.

10. The presence of high voltage, heat, pressure, and rotating parts in an operating ironer can be hazardous. Installation and repair of ironer should be performed only by qualified maintenance personnel.

11. Never operate equipment alone in the laundry. Be sure there is always someone else in the laundry when operating any piece of equipment.

12. Any person operating or servicing the ironer shall not wear loose fitting garments, dangling jewelry, or unrestrained hair styles that could result in entanglement and be hazardous to the person's safety.

13. No machine shall be operated when in need of repair or adjustment, or in a condition that may be hazardous to the operator or any other person. If a hazardous condition develops, the operator must immediately stop the machine and call for assistance.

14. Failure to install, maintain, and/or operate this machine according to instructions, may result in hazardous conditions, which can result in bodily injury and/or property damage.

WARNING

FAILURE TO INSTALL, MAINTAIN, AND/OR OPERATE THIS MACHINE ACCORDING TO MANUFACTURER'S INSTRUCTIONS MAY RESULT IN CONDITIONS WHICH CAN PRODUCE BODILY INJURY AND/OR PROPERTY DAMAGE.

NOTE: The **WARNING** and **IMPORTANT** instructions appearing in this manual are not meant to cover all possible conditions and situations that may occur. It must be understood that common sense, caution and carefulness are factors, which **CANNOT** be built into this ironer. These factors **MUST BE** supplied by the person(s) installing, maintaining or operating the ironer.

Always contact your dealer, distributor, service agent or the manufacturer on any problems or conditions you do not understand.

Trained, qualified personnel must perform all operation, maintenance, and repair of the flatwork ironer only. Adequate lighting, operating, and shutdown instructions must be provided, and all operating and supervising personnel must be thoroughly instructed in safe operating practices.

IMPORTANT INSTALLATION INSTRUCTIONS

1. Venting is critical! (See Exhaust & Venting Manual)
2. The installation must conform with local codes or, in the absence of local codes, with the National Fuel Gas Code, ANSI Z223.1-1998.
3. The ironer and its individual shutoff valve must be disconnected from the gas supply piping system during any pressure testing of that system at test pressures in excess of .5 psig (3.5 kPa).
4. The ironer must be isolated from the gas supply piping system by closing its individual manual shutoff valve during any pressure testing of the gas supply piping system at test pressures equal to or less than .5 psig (3.5 kPa).
5. The ironer, when installed, must be electrically grounded in accordance with local codes, or in the absence of local codes, with the National Electrical Code, ANSI/NFPA 70-1990. This appliance must be connected to a grounded, metal, permanent wiring system; or an equipment-grounding conductor must be run with the circuit conductors and connected to the equipment-grounding terminal or lead on the appliance.
6. The ironer must not be installed or stored in an area where it will be exposed to water and/or weather. In addition, LP Gas heated ironers must not be installed or operated in areas below ground level.
7. Items should not be stored near the ironer so that air openings into the combustion chamber remains open.
8. All set screws should be checked and tightened before starting ironer.

CLEARANCES

The following minimum clearances to construction and all combustible materials must be maintained:

1. 18 inches to the rear of the ironer, measured from any portion of the ironer, if possible.
2. 18 inches to either side of the unit as measured from the outside of the end frames, if possible. (**NOTE:** Door panels will be removed and replaced regularly.)
3. All flooring material must be noncombustible. No raised construction or combustible materials are allowed beneath the ironer.
4. No combustible ceiling, or other construction materials are allowed on or above the ironer.

SAFETY WARNINGS AND DECALS

Safety warnings and decals have been provided in key locations to remind you of important precautions for the safe operation and maintenance of your ironer. Please take the time to review these warnings before proceeding with service work. All decals have been designed and applied to withstand washing and cleaning. Decals should be checked periodically to be sure they have not been damaged, removed, or painted. Replacement warning labels are provided free of charge.

SPECIAL TOOLS REQUIRED

A pyrometer with a probe suitable for rotating round surfaces is absolutely required when adjusting or replacing a thermostat. Thermostats shipped from our parts department cannot be exactly calibrated since the variance of the mass of the contact shoe is great from machine to machine.

REPLACEMENT PARTS

If any component becomes defective, deteriorated, or otherwise unsuitable to function as intended, the component must be repaired or replaced, or the flatwork ironer must be removed from service. Components must only be replaced with the same approved make and model as specified by the manufacturer or otherwise originally supplied. The ironer model and serial number is required when ordering spare parts. Contact the manufacturer for replacement parts.

VOCABULARY

Below are definitions to commonly used words or phrases in selling and servicing Flatwork Ironers. The terminology and definitions apply only to your ironer and should not be used in association with products manufactured by others.

1. **Flatwork:**
   Linens and cloths that can be laundered (water washed), and then ironed by a flatwork ironer rather than by hand.
2. **Calendering:**
   A machine in which cloth is made smooth and glossy by being pressed through rollers.
3. **Waxing:**
   The process in which special wax, in liquid or granular form, is added to the ironer to help linen “slide” across the heated cylinder (done daily). Wax helps protect the cylinder; prolongs life of return ribbons; eliminates static build-up; promotes a quality finish; and is necessary on high production speed.
4. **Selvage:**
   The edge of a fabric woven so that it will not ravel.
5. **Flatwork Ironer:**
   The term we developed to better describe the type of machinery we manufacture.
6. **Feed Ribbon:**
   The textile ribbon used to take the flatwork into the ironer. These ribbons are usually made from a special cotton/poly combination.
7. **Feed Ribbon Drive Roll:**
   The metal roll that drives or turns the feed ribbons.
8. **Return Ribbon:**
   The textile ribbon used to hold the flatwork against the heated cylinder and “return” it to the front of the ironer. These ribbons are usually made of Nomex.
9. **Return Ribbon Drive Roll:**
   The metal roll that drives or turns the return ribbons.
10. **Return Ribbon Guide Bar:**
    The weighted floating bar at the back of the ironer that guides the return ribbons to insure they track straight.

11. **Heat Shield:**
The metal plate located between the heated roll and the frame. This plate “shields” the frame from heat and therefore lengthens the life of the bearings and sprockets.
12. **Green Light:**
The green light on the frame that indicates the status of the burner or heating elements. If the green light is on, then the heating system is off and the surface temperature of the heated roll is as indicated on the thermostat knob. If the green light is off, then the heating system is on.
13. **Contact Shoe:**
The brass / steel bar that holds the thermostat probe or limit switch.
14. **Contact Shoe Assembly:**
The assembly that supports the contact shoe against the heated roll.
15. **Gas Mixer:**
The assembly that regulates the mixture of gas and air.
16. **Idler Roll:**
The metal roll that supports the return ribbons. This roll is not driven by the drive system but rather “idles” or turns freely by allowing the return ribbons to run at the speed dictated by the return ribbon drive roll.
17. **Return Ribbon Drive Roll Cover:**
The Nomex cover that is wrapped around the return ribbon drive roll. This cover creates greater friction between the return ribbon drive roll and the return ribbon to insure that the return ribbon turns at the proper speed.
18. **Compression Roll or Pressure Roll:**
The metal roll that applies pressure to the flatwork. The roll is covered with a Nomex pad and cover and is spring loaded so that pressure can be applied to the flatwork to insure high quality finishes.
19. **Compression Roll Pad:**
The Nomex material that is wrapped around the compression roll. It is either white or green in color.
20. **Compression Roll Cover:**
The Nomex material that is wrapped around the compression roll pad and the compression roll. It is either white or yellow in color. Older models use a pad and cover that is one piece.
21. **Heated Roll or Cylinder:**
The large metal roll that is heated to dry the flatwork.
22. **Canopy or Hood:**
The formed piece of metal that covers the top of the ironer and fits cleanly in between the metal frames of the ironer.
23. **Canopy Blower and Motor:**
This item vents to the atmosphere products of combustion, heat, and moisture. It is either attached to the canopy or remotely mounted on a wall.
24. **Tie Rods:**
The metal rods used to hold the ironer frames together. Most models have four tie rods.
25. **Frame:**
The metal enclosures at each end of the ironer. The left frame contains most of the electrical and utility components. The right frame contains the drive system.
26. **Folding Conveyor:**
The conveyor that oscillates to fold the flatwork.
27. **Intermediate Conveyor:**
The conveyor or pinch rolls that suspend the flatwork above the folding conveyor so that it may be folded.
28. **Lower Conveyor:**
The conveyor that takes the flatwork to either the front or rear of the ironer.

29. **Guide Tape:**
The half inch wide Nomex tape that prevents the flatwork from wrapping around the compression roll. The guide tape is wrapped around the compression roll and one of the tie rods.
30. **Interlock Switch:**
The micro switch located in each frame so that when the door panel is removed, the ironer stops. The door panel must be replaced before the ironer will start.
31. **System Control:**
The electronic device that controls the gas system.
32. **Monitoring System:**
The electronic device that monitors the use of the ironer and turns off the heat when the ironer is not used for twenty minutes. Other variations also shut the ironer completely off when it has cooled. This device works in conjunction with a micro switch located between the feed ribbons.
33. **Door Panels:**
The removable panels located on the outside of each end frame.
34. **Stop Bar:**
The red metal bar that runs the entire width of the feeding surface. If the operator pushes or pulls this bar, the ironer will stop.
35. **Pull Cord:**
The orange cord that runs the entire width of the feeding surface and along the back of rear return ironers. The cord may be pushed or pulled in any direction to stop the ironer. It must then be pulled again before the ironer can be started again.
36. **Receiving Table:**
The white metal tables located at the front of the ironer and at the back for rear return models. These tables “receive” the flatwork after it has been ironed.
37. **Feed Table:**
The metal table that supports the feed ribbons near the heated roll and guides or “feeds” the flatwork into the ironer.
38. **Pressure Differential Switch:**
An electronic and mechanical switch that insures positive airflow of the canopy blower.
39. **Igniter:**
The electronic device that on gas heated ironers creates a spark to ignite the gas.
40. **Flame Sensor:**
The electronic device located at the far end of the gas burner that senses or “proves” ignition.

START UP AND SHUT DOWN PROCEDURES

These procedures should be used at all times to properly start and stop the ironer.

See p. 17 for Start Up, and p. 25 for Shut Down procedures.

SECTION 1 – INSTALLATION

1-1 UNPACKING AND HANDLING

All flatwork ironers are delivered in heavy domestic crating, or where required, in export boxing. The machine is complete except for commercially available interconnecting plumbing, electrical, and venting. Carefully follow this procedure to insure proper unpacking to minimize the possibility of lost or mislaid parts.

1. Carefully dismantle shipping crate, to expose machine.
2. Check contents of the box against your packing slip to make sure that each piece of equipment has arrived intact.
3. Inspect all equipment carefully and report any damaged or missing parts immediately to the carrier and to your distributor.
4. Adjust spring tension on thermostatic shoe assembly and high limit shoe assembly. These items may tighten on heated roll during shipment.

IMPORTANT: CARELESS HANDLING CAN DAMAGE THE PADDING OF THE PRESSURE ROLL. USE CARE WHEN REMOVING THE PROTECTIVE PAPER FROM THE HEATED ROLL.

5. Remove protective paper wrapping from the heated roll. (See Video).
6. Remove wood positioning blocks wedged between heated roll and the frame.
7. Move the ironer to a suitable location. Do not use a pallet-jack or forklift directly under the tie rods.

1-2 SITE SELECTION

Once the ironer has been unpacked, consider the following recommendations before installation to assure that the best possible site is chosen. Refer to the ironer brochure for all over dimensions of equipment.

Assure that the location is:

- Reasonably level.
- Sturdy enough to support machine's weight (See ironer brochure).
- Free of obstructions and with adequate room on both sides of the ironer for maintenance and operating personnel.
- Convenient to electrical power of correct frequency and voltage (See ironer data plate).
- Clean, to avoid soiling of machinery and flatwork.
- Convenient to adequate steam, gas, or electrical supply (See ironer data plate).

1-3 RECEIVING TABLE ASSEMBLY (Models with Receiving Tables Disassembled Only).

See Section 1-4 for 20" & 24" Model with built-in Folder.

1. Remove tables and bracket from the base skid.
2. Note the markings on the tables as to, which are the front and rear assemblies (if equipped).
3. Remove the side panels to gain access to the inside of each frame.
4. Secure the table brackets to the outside of each frame. Rounded edge of each bracket should face down.
5. Fit table(s) (square edge facing outward) and secure with bolts provided.

1-4 RECEIVING TABLE ASSEMBLY (20” and 24” Models with built-in Folder).

1. Follow disassembly instructions in manual.
2. Remove tables, brackets, and canopy motor/blower from base of skid.
3. Note the markings on the table and brackets as to which are the front and rear assemblies.
4. Remove the side panel to gain access to the inside of each frame.
5. Front table installation:
   - **a)** Secure the table brackets to the outside of each frame. Rounded edge of each bracket should face down.
   - **b)** Fit table (square edge facing outward) and secure with bolts provided.
6. Rear table installation: (SEE FIGURE 1-1A)
   - **a)** Remove bolts holding lower conveyor down. Pull conveyor up and insert bolts through the frame so the conveyor is parallel with the floor.
   - **b)** Straighten the ribbons and be sure the folding conveyor switches are not obstructed.
   - **c)** Level lower conveyor ribbon support table.
   - **d)** Attach rear table brackets (shorter brackets) to the outside of each lower conveyor bracket.
   - **e)** Attach rear table support brackets (longer brackets) to the outside of each frame and to the end of each rear table.
   - **f)** Secure rear table. Be sure square edge faces outward.

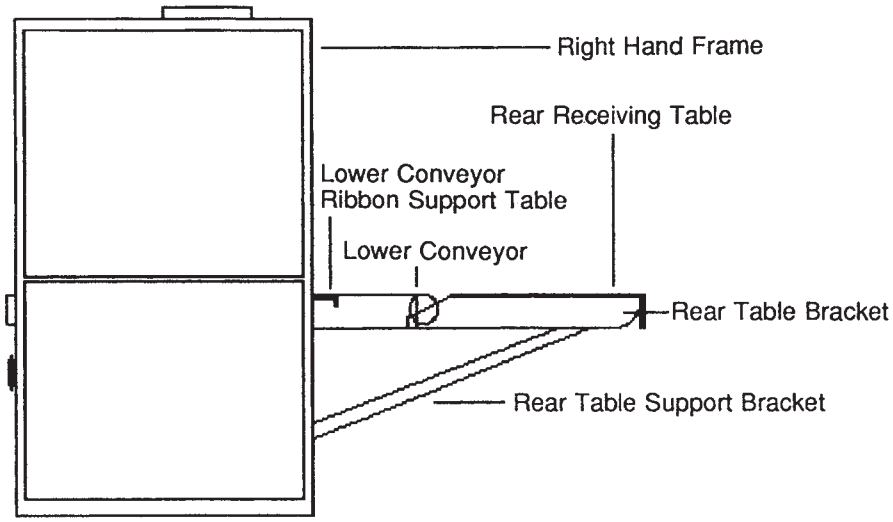

(Diagram is exaggerated and not to scale)

FIGURE 1–1A

1-5 IRONER INSTALLATION

1. Position the ironer at the desired location, being sure that sufficient clearance exists on all sides for operation and maintenance.
2. Align any pulleys and sprockets appropriately, and tighten any set screws that may have loosened during shipment.

NOTE: (Most ironers are shipped with canopy motor/blower already installed). If the canopy motor/blower is not installed on the ironer, it may be remotely mounted if required.

⚠ WARNING

TO REDUCE THE RISK OF COMBUSTION GAS ACCUMULATION (CARBON MONOXIDE AND CARBON DIOXIDE) EXHAUST VENT MUST BE VENTED TO THE OUTDOORS. VENT MUST NOT BE REDUCED OR RESTRICTED IN ANY MANNER. RUNS SHOULD BE AS SHORT AS POSSIBLE. DO NOT VENT THROUGH A COMBUSTIBLE SURFACE. USE ROUND, STRAIGHT VENT PIPE.

⚠ WARNING

BACK PRESSURE IN THE EXHAUST VENT CAN CAUSE DEADLY GASES TO FLOW BACKWARD INTO THE OPERATING AREA. THE IRONER VENT MUST NOT BE SHARED WITH OTHER EQUIPMENT. ADEQUATE MAKE-UP AIR FOR OPERATOR BREATHING MUST BE PROVIDED TO REPLACE THE AIR REMOVED BY THE EXHAUST BLOWER. MAKE SURE EXIT CFM AIRFLOW IS THE SAME AS THE BLOWER CFM.

3. For exhaust vent sizing, consult “Venting/Exhaust….. Manual”.

NOTE: MACHINES INSTALLED ABOARD SHIPS ARE TO BE BOLTED TO THE DECK.

4. If machine is to be anchored to the floor, insert bolts through the four holes on the inside or outside of the two end frames.
5. Check contact shoe assembly (2) so they are not too tight against cylinder.

UTILITY CONNECTIONS

1-6 GAS REQUIREMENTS (Gas Heated Models Only) – See pages 40-43 of “Maintenance” Manual.

⚠ WARNING

GAS USED AS FUEL BY IRONER IS EXTREMELY FLAMMABLE. TO REDUCE THE RISK OF FIRE OR EXPLOSION, MAKE SURE THAT IRONER’S GAS SUPPLY IS SHUT OFF AND LOCKED OUT BEFORE ATTEMPTING ANY INSTALLATION OR REPAIR WORK.

Gas requirements are listed on ironer data plate with the following additions:

1. Gas regulator is built into control valve. Bring 6 WCI to back of ironer (9 WCI to 3000 and 3600). For LP: Bring 16 WCI to back of ironer.
2. Secondary gas regulator is required for installations if input gas pressure is above normal.
3. The inside diameter of the valve and supply line must not be less than specified in brochure.
4. Provide adequate make up air for gas heated ironers according to local requirements. As a minimum, 14 cubic feet of air needs to be provided per 1 cubic foot of gas consumed.

MODEL	RECOMMENDED VENT SIZE
MINIRITE	No Vent Required
FINISHRITE	4” Round
IMPRESS 56 & 66	4” Round
IMPRESS 82	2 – 4” Round
1200 x 85, 100, 110, 120 and 132	2 – 4” Round
1600’s	9” or 10” Round
2000’s	9” or 10” Round
2400’s	9” or 10” Round
3000 & 3600’s	2 – 9” or 10” Round

NOTE: If possible, vent length should not exceed 20 feet (horizontal and vertical distances combined). Deduct 4 to5 feet for each elbow used. Vent must be unrestricted and not be connected with any other machine(s). Consult factory for distances over 20 feet.

TABLE 1-1

1-7 ELECTRICAL CONNECTIONS (All models)

WARNING

ELECTRICAL VOLTAGES ARE DANGEROUS. TO REDUCE THE RISK OF ELECTRICAL SHOCK AND FIRE, CONSULT A QUALIFIED AND LICENSED ELECTRICIAN TO INSTALL THIS EQUIPMENT. THIS INSTALLATION MUST COMPLY WITH ALL ELECTRICAL CODES. CONSULT WITH THE UTILITY COMPANY OR A QUALIFIED ELECTRICIAN FOR ADVICE ON THE INSTALLATION, MATERIAL, WIRE SIZES, ETC. TO BE USED.

This equipment must be connected through a circuit breaker required by local code. See TABLE 1-2 for recommendations.

IMPORTANT: BE SURE THAT CORRECT VOLTAGE SOURCE IS AVAILABLE BEFORE CONNECTING ELECTRICAL WIRES.

1. Place circuit breaker in the off position lock out and tag with a sign warning that work is in progress.
2. Install conduit between the circuit breaker and the left-hand frame. Be sure to use a conduit fitting in the pre-punched hole in the back of the frame.
3. Connect wires to the terminal block as shown in corresponding wiring diagram.
4. Recheck all wiring, and close the frame panel.
5. Remove tag from circuit breaker and place it in the on position.
6. Press the start to check for proper rotation of the ironer. The rolls should rotate in the direction as indicated by the labels. The feed ribbons should move inward.

IMPORTANT: INCORRECT ROTATION CAN CAUSE SERIOUS DAMAGE TO THE MACHINE. STOP THE MACHINE IMMEDIATELY IF THE ROTATION IS BACKWARD.

7. If roller is rotating in the wrong direction in an ironer designed for three-phase power, any two of the three input wires from the voltage source should be interchanged at the magnetic circuit breaker to change the rotation direction.

continued……

CMV SHARPER FINISH USES A VARIETY OF VOLTAGES, PHASES, AND HERTZ AS THEY SELL THROUGHOUT THE WORLD. BELOW FIND SOME: FLATWORK IRONER SUGGESTED CIRCUIT BREAKER SIZES

MODEL	VOLTAGE	HERTZ	PHASE	AMPS/MOTOR	AMPS/HEATER	TOTAL AMPS	BREAKER
MR	230	60	1	.65	10.9	11.6	20
	230	50	1	.65	10.9	11.6	20
7” G	120	60	1	7.3		7.3	15
	230	60	1	4.02		4.02	15
	230	50	1	3.85		3.85	15
7” x 36” E							
	230	60	1	4.02	23.5	27.52	40
	230	50	1	3.85	23.5	27.35	40
	208	60	3	4.02	15	19.02	30
	230	60	3	4.02	13.5	17.52	30
	380	50	3	3.85	8.3	12.15	20
	415	50	3	3.85	7.51	11.36	20
	460	60	3	4.02	6.8	10.82	20
7” x 48” E							
	230	60	1	4.02	30.4	34.42	40
	230	50	1	3.85	30.4	34.25	40
	208	60	3	4.02	19.8	23.82	30
	230	60	3	4.02	17.9	21.92	30
	380	50	3	3.85	10.8	14.65	20
	415	50	3	3.85	9.9	13.75	20
	460	60	3	4.02	9	13.02	20
7” x 60” E							
	230	60	1	4.02	38.3	42.32	60
	230	50	1	3.85	38.3	42.15	60
	208	60	3	4.02	24.9	28.92	40
	230	60	3	4.02	22.5	26.52	40
	380	50	3	3.85	13.6	17.45	30
	415	50	3	3.85	12.5	16.35	30
	460	60	3	4.02	10.8	14.82	20
12” G/S	120	60	1	7.9		7.9	15
	230	60	1	4.52		4.52	15
	230	50	1	4.85		4.85	15
	208	60	3	3.1		3.1	20
	230	60	3	2.94		2.94	20
	380	50	3	2.6		2.6	20
	415	50	3	2.52		2.52	20
	460	60	3	2.42		2.42	20
12” x 56” E	230	60	1	3.82	60.87	64.69	70
	230	50	1	4.15	60.87	65.02	70
	208	60	3	2.5	39.59	41.99	50
	230	60	3	2.24	35.8	38.04	50
	380	50	3	1.9	21.3	23.2	30
	415	50	3	1.82	19.84	21.66	30
	460	60	3	1.72	17.9	19.62	30
12” x 66” E	230	60	1	3.82	69.56	73.38	80
	230	50	1	4.15	69.56	73.71	80
	208	60	3	2.4	45.25	47.65	60
	230	60	3	2.24	40.92	43.16	50
	380	50	3	1.9	24.77	26.67	30
	415	50	3	1.82	22.68	24.5	30
	460	60	3	1.72	20.46	22.18	30

continued……

MODEL	VOLTAGE	HERTZ	PHASE	AMPS/MOTOR	AMPS/HEATER	TOTAL AMPS	BREAKER
1200	120	60	1	8.3		8.3	20
G/S/F/R	230	60	1	4.74		4.74	20
82”-132”	230	50	1	5.6		5.6	20
	208	60	3	4.38		4.38	20
	230	60	3	4.2		4.2	20
	380	50	3	3.41		3.41	20
	415	50	3	3.31		3.31	20
	460	60	3	3.32		3.32	20
1200	230	60	1	4.74	91.3	96	110
E/F/R	230	50	1	5.6	91.3	96.9	110
82” & 85”	208	60	3	4.38	58.4	62.8	70
	230	60	3	4.2	52.8	57	70
	380	50	3	3.41	31.9	35.3	40
	415	50	3	3.31	29.2	32.5	40
	460	60	3	3.32	26.4	29.7	40
1200	230	60	1	4.72	130.4	135.1	150
E/F/R	230	50	1	5.6	130.4	136	150
120”	208	60	3	4.38	83.4	87.8	100
	230	60	3	4.2	75.4	79.6	90
	380	50	3	3.41	45.6	49	60
	415	50	3	3.31	41.8	45.1	50
	460	60	3	3.32	37.7	41	50
1600	120	60	1	27.7		27.7	30
G/S/F	230	60	1	14.2		14.2	20
	230	50	1	14.8		14.8	20
	208	60	3	8.6		8.6	20
	230	60	3	8.2		8.2	20
	380	50	3	4.4		4.4	20
	415	50	3	4.2		4.2	20
	460	60	3	4.1		4.1	20
1600	120	60	1	33.9		33.9	40
G/S/R/AF	230	60	1	14.3		14.3	20
	230	50	1	14.9		14.9	20
	208	60	3	10.6		10.6	20
	230	60	3	10		10	20
	380	50	3	5.5		5.5	20
	415	50	3	5.3		5.3	20
	460	60	3	5.0		5.0	20
1600	208	60	3	4.6	78	82.6	90
E/F	230	60	3	4.2	69	73.2	80
66”	380	50	3	2	41.8	43.8	50
	415	50	3	1.82	38.3	40.12	50
	460	60	3	1.75	34.5	36.25	40
1600	208	60	3	4.6	103.5	108.1	120
E/F	230	60	3	4.2	93.6	97.8	120
90”	380	50	3	2	56.6	58.6	70
	415	50	3	1.82	51.9	53.72	60
	460	60	3	1.75	46.8	48.55	60
1600	208	60	3	4.6	141	145.6	150
E/F	230	60	3	4.2	127	131.2	140
120”	380	50	3	2	77	79	90
	415	50	3	1.82	70.7	72.52	80
	460	60	3	1.75	63.8	65.55	70
1600	208	60	3	6.85	78	84.85	90
E/R/AF	230	60	3	6.2	69	75.2	90
66”	380	50	3	3.15	41.8	44.95	50
	415	50	3	2.89	38.3	41.19	50
	460	60	3	2.6	34.5	37.1	50

continued ……

MODEL	VOLTAGE	HERTZ	PHASE	AMPS/MOTOR	AMPS/HEATER	TOTAL AMPS	BREAKER
1600	208	60	3	6.85	103.5	110.35	120
E/R/AF	230	60	3	6.2	93.6	99.8	110
90”	380	50	3	3.15	56.6	59.75	70
	415	50	3	2.89	51.9	54.79	60
	460	60	3	2.6	46.8	49.4	60
1600	208	60	3	6.85	141	147.85	160
E/R/AF	230	60	3	6.2	127	133.2	140
120”	380	50	3	3.15	77	80.15	90
	415	50	3	2.89	70.7	73.59	80
	460	60	3	2.6	63.8	66.4	70
2000	120	60	1	26.3		26.3	30
G/S/F	230	60	1	13.5		13.5	20
	230	50	1	13.7		13.7	20
	208	60	3	8.8		8.8	20
	230	60	3	8.3		8.3	20
	380	50	3	4.5		4.5	20
	415	50	3	4.3		4.3	20
	460	60	3	4.2		4.2	20
2000	120	60	1	32.9		32.9	40
G/S/R/AF	230	60	1	13.6		13.6	20
	230	50	1	13.9		13.9	20
	208	60	3	10.9		10.9	20
	230	60	3	10.2		10.2	20
	380	50	3	5.5		5.5	20
	415	50	3	5.2		5.2	20
	460	60	3	4.9		4.9	20
2400	120	60	1	33.5		33.5	40
G/S/R/AF	230	60	1	13.9		13.9	20
	230	50	1	16.7		16.7	20
	208	60	3	7.5		7.5	20
	230	60	3	6.9		6.9	20
	380	50	3	4.5		4.5	20
	415	50	3	4.1		4.1	20
	460	60	3	3.9		3.9	20
3000/3600	208	60	3	16.6		16.6	30
G/S/R	230	60	3	16		16	20
	380	50	3	9.3		9.3	20
	415	50	3	8.5		8.5	20
	460	60	3	8		8	20

Legend: **G** = Gas heated **F** = Front return
S = Steam heated **R** = Front or rear return
E = Electrically heated **AF** = Built-in folder

Heated roll diameters and lengths are indicated in inches.
All roll lengths included for each model unless otherwise indicated.

WARNING

FAULTY FINGER GUARD OPERATION EXPOSES THE OPERATOR TO NEEDLESS HAZARDS. MAKE SURE THE FINGER GUARD AND FINGER GUARD SWITCH OPERATES PROPERLY. NEVER OPERATE AN IRONER WITHOUT A PROPERLY FUNCTIONING FINGER GUARD AND SAFETY SWITCH. DO NOT ALLOW FINGERS, HANDS, OR FOREIGN OBJECTS TO PASS UNDER OR BEHIND THE FINGER GUARD. SERIOUS INJURY CAN RESULT.

8. Press the finger guard. Drive motor and motor for exhaust blower must stop.

1-8 GAS SUPPLY CONNECTIONS (FIGURE 1-2, gas heated models only)

Follow these steps to assure that the gas heated flatwork ironer is properly connected to the gas supply.

WARNING

ELECTRICITY, HEAT, AND PRESSURE ARE PRESENT IN POTENTIALLY HARMFUL QUANTITIES IN AN OPERATING IRONER. NEVER ATTEMPT REPAIR ON A MACHINE DURING OPERATION.

1. Place circuit breaker in off position, lock out and tag with a sign warning that work is in progress.
2. Obtain fittings and valves necessary to connect gas supply to ironer from a local source. (See ironer brochure for correct pipe sizing).

WARNING

GAS USED BY THE IRONER IS EXTREMELY FLAMMABLE. BE SURE THAT GAS SUPPLY IS SHUT OFF WITH THE PRESSURE REMOVED BEFORE ATTEMPTING WORK ON THE GAS LINES. CHECK THAT THE GAS LINE FOR CONNECTION TO THE IRONER HAS BEEN SHUT OFF FROM THE GAS SUPPLY.

3. Check that the gas line selected for connection to the ironer has been shut off from the gas supply.
4. Properly support gas supply line. Do not put strain or weight on the gas valve.

WARNING

THE EXHAUST BLOWER WILL REMOVE AIR FROM THE SITE. BE CERTAIN THAT ADEQUATE MAKE UP AIR HAS BEEN PROVIDED FOR THE OPERATOR. SEE NUMBER 5 BELOW.

5. As a general rule, at least 14 cubic feet of fresh air is required for each cubic foot of gas consumed. You must consult the local utility company for their requirements.

IMPORTANT: ALTHOUGH THE VALVE/REGULATOR FOR THE 24" MODEL ONLY ACCEPTS A 3/4" GAS LINE CONNECTION, THE RUN FROM THE GAS SUPPLY TO IMMEDIATELY BEFORE THE VALVE/REGULATOR MUST HAVE A 1" INSIDE DIAMETER.

1-9 STEAM CONNECTIONS (Steam heated models only)

IMPORTANT: RESTRICTIONS IN INLET PIPING IMPAIR THE EFFICIENCY OF THE IRONER. MAKE SURE THAT NO STEAM SUPPLY PIPE OR FITTING HAS AN INSIDE DIAMETER SMALLER THAN YOU FIND IN IRONER BROCHURE.

Steam requirements of the ironer are listed on the ironer date plate with the following additions: (See FIGURE 1-3).

1. A pressure-reducing valve is required for steam sources with the pressure higher than 125 PSI.
2. A steam trap must be installed, using the Armstrong 125# steam trap, #813LV or equivalent.
3. Valves and plumbing are required as applicable to the individual installation.

*4. Convenient extension steam lines which connect the inlet and return parts of the rotary union steam plumbing inside the ironer is installed at the factory.**NOTE:** Only a steam certified plumber should make connection to rotary pressure joint!

1-10 AIR SUPPLY CONNECTIONS

(For 16", 20", 24", 30" and 36" models with built-in folder.

Follow these steps to assure that the folder is properly connected to the air supply:

WARNING

AIR PRESSURE IS PRESENT IN POTENTIALLY HARMFUL QUANTITIES IN AN OPERATING IRONER. NEVER ATTEMPT REPAIRS ON THE FOLDER DURING OPERATION OR WHEN PRESSURE IS PRESENT.

* If not done properly, leakage will occur!

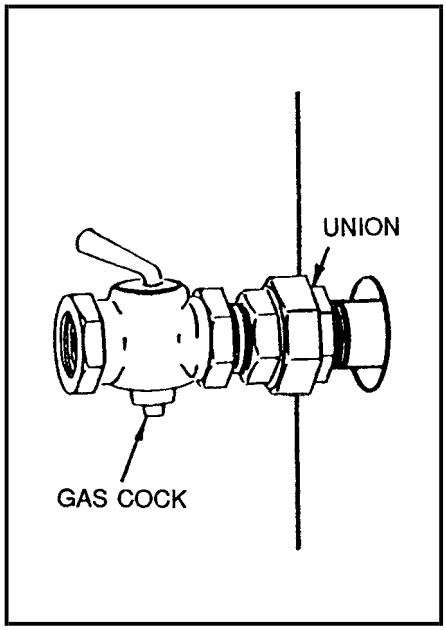

FIGURE 1–2 Inlet Gas Fittings

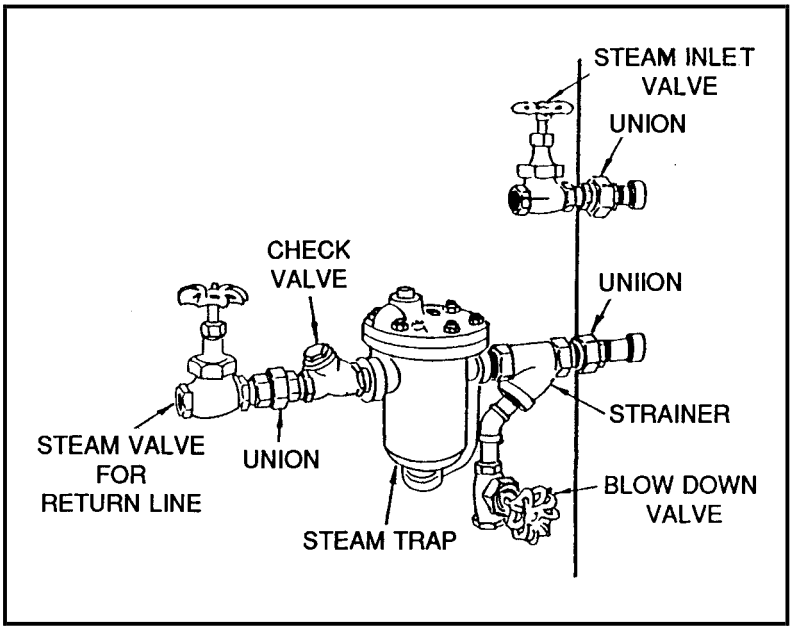

FIGURE 1–3 Inlet and Return Steam Fittings

1. Place circuit breaker controlling the ironer in off position and tag with a sign warning that repairs are in progress.
2. Obtain fittings and valves necessary to connect air supply (compressor) check valve, and relief valve to the ironer. The air inlet on the ironer is 1/4” NPT, located at the rear of the right hand frame.

NOTE: THE IRONER REQUIRES AN AIR SUPPLY PRESSURE OF 25 TO 30 PSI. ALL VALVES AND FITTINGS SHOULD BE CAPABLE OF HANDLING AIR AT A MINIMUM OF 100 PSI.

WARNING

COMPRESSED AIR USED IN THE FOLDER CAN BE DANGEROUS TO OPERATORS OR MAINTENANCE PERSONNEL. CHECK ALL AIR LINES AND CONNECTIONS TO MAKE SURE THAT NO LEAKS HAVE DEVELOPED. ALWAYS ISOLATE ANY AIR VALVES, AIR OPERATED CLUTCHES, REGULATORS, AND OTHER AIR COMPONENTS CAREFULLY DRAINING THE AIR BEFORE ATTEMPTING REPAIRS. IF PERSONS ARE EXPOSED TO A SUDDEN BLAST OF PRESSURIZED AIR ON THE SKIN, THEY SHOULD BE EXAMINED BY A PHYSICIAN FOR POSSIBLE EMBOLISM.

3. Check that the air line connected to the ironer has been shut off from the air supply.
4. Mount the air filter supplied with the ironer on the 1/4” air inlet located at the bottom of the rear right frame.
5. Install at least one check valve, one air shut-off valve, and one pressure blow down valve to the air filter.

NOTE: THE PRESSURE REGULATOR AND GAUGE ARE LOCATED INSIDE THE RIGHT FRAME. THE SETTING OF THE REGULATOR HAS BEEN ADJUSTED AT THE FACTORY. DO NOT READJUST THIS REGULATOR UNLESS NECESSARY.

6. Close the inlet valve and blow down valve.
7. Properly support the air supply line. Do not strain or put weight on the air components or connections.

START UP PROCEDURE:

1) GAS HEATED MODELS

Although the flatwork ironer has been designed for simplicity of operation, certain steps must be taken to assure smooth, efficient operation. Follow these steps to start the ironer:

NOTE: HEAT BUILD-UP CAN DAMAGE THE UNIT IF ALLOWED TO CONTINUE. KEEP THE IRONER IN OPERATION TO AVOID PROLONGED HEAT BUILD-UP.

1. Check alignment of any pulleys and sprockets. Tighten any set screws, etc. that may have loosened during shipment.
2. Check that the circuit breaker for the ironer is turned on; then press the start button to energize the drive systems and vent system blower motor.
3. Check that the motor rotation is correct, moving feed ribbons into the rollers. Also check that the canopy blower motor rotation is correct, discharging air from the top of the ironer to the outside of the building.
4. Open the gas cock in the line delivering gas to the ironer.
5. Set the thermostat for the desired operating temperature.
6. Check that the burner is lit by looking through the hole in the left hand door panel.
7. Warm up the ironer for approximately 10 minutes. The green light will illuminate when the machine is ready to process flatwork.

⚠ WARNING

IF MATERIAL IS CAUGHT OR JAMMED IN AN OPERATING MACHINE SHUT DOWN THE MACHINE IMMEDIATELY. DO NOT ATTEMPT TO REMOVE JAMMED MATERIAL FROM AN OPERATING MACHINE. DISCONNECT POWER AT THE CIRCUIT BOX AND WAIT UNTIL THE MACHINE IS COOL BEFORE ATTEMPTING TO FREE JAMMED MATERIAL FROM THE MACHINE.

2) ELECTRIC HEATED MODELS

1. Check alignment of any pulleys and sprockets. Tighten any set screws, etc. that may have loosened during shipment.
2. Check that the circuit breaker for the ironer is turned on; then press the start button to energize the drive system, vent system blower motor (if equipped), and the electric heating elements.

NOTE: HEAT BUILD-UP CAN SHORTEN FLATWORK IRONER LIFE IF ALLOWED TO CONTINUE. KEEP MACHINE BUSY TO AVOID PROLONGED HEAT BUILD-UP.

3. Check that the drive motor rotation is correct, moving the feed ribbons into the rollers.
4. Set the thermostat for the desired operating temperature.
5. Warm up ironer for approximately 10 minutes. The green light will indicate when the ironer is ready to process flatwork. (NOTE: Machines operating 380V or 415V will take slightly longer to heat up).

WARNING

IF MATERIAL IS CAUGHT OR JAMMED IN AN OPERATING MACHINE, SHUT DOWN, AND TAG THE MACHINE IMMEDIATELY. DO NOT ATTEMPT TO REMOVE JAMMED MATERIAL FROM AN OPERATING MACHINE. DISCONNECT POWER AT THE CIRCUIT BOX AND WAIT FOR MACHINE IS COOL BEFORE ATTEMPTING TO FREE MATERIAL FROM THE MACHINE.

3) STEAM HEATED MODELS

NOTE: HEAT BUILD-UP CAN SHORTEN THE LIFE OF THE IRONER IF ALLOWED TO CONTINUE. KEEP THE IRONER BUSY TO AVOID PROLONGED HEAT BUILD-UP.

1. Check alignment of any pulleys and sprockets. Tighten any set screws, etc. that may have loosened during shipment.
2. Check that the circuit breaker for the ironer is turned on; then press the start button to energize the ironer drive system motor and vent system motor (if equipped).
3. Check that the drive motor rotation is correct, moving the feed ribbons into the rollers.
4. Open Steam Inlet and Return valves. Be sure Return valve is open before opening Steam Inlet valve.

Note: For gas, electric, & steam heated models - look for initial 'feed ribbon shrinkage'. See p. 27.

SAFETY CONTROLS

After completing any and all maintenance and/or service procedures, all safety systems should be checked for proper operation. If any of the systems fail to operate properly, they must be repaired before the ironer can be operated. Some, but not all of the safety controls are listed below:

- Stop Bar
- Pull Cable (front and rear)
- Monitoring System
- Ventilation Sail Switch/Pressure Differential Switch
- Door Panel Switches
- Rear Guard
- Heated Roll Guard
- Manual Operating Device
- High Limit Switch
- Gas Monitoring Switch

Are all Guards in place? Are all warning and caution labels readable?

WIRING DIAGRAM

The wiring diagram is located on the inside of the left frame panel or on the electrical control box cover.

SECTION 2 – THEORY OF OPERATION

2-1 GENERAL – See Figure 2-1

The flatwork ironer accomplishes its function by applying heat and pressure to properly moistened flatwork. Gas, electricity or steam supplies the heat while the electric motor(s) provides the motion necessary to stretch, flatten, dry, and transport the flatwork.

2-2 DRIVE SYSTEM

The electric motor installed in the flatwork ironer along with the connecting gears, pulleys, sprockets, and roller chains, drives the rolls and ribbons. Keyed to the shafts of the motor and the speed reducer are pulleys and a connecting V-belt which sets the speed. Some models allow for variable speed. The speed reducer output shaft, with sprockets and chains, turns the heated roll, the pressure roll, the feed ribbon drive roll, and the return ribbon drive roll. Cloth belts, called ribbons, located on the feed and return rolls, carry the work. The sprockets turn the rolls at different speeds. Work fed into the ironer gets slightly stretched, as well as flattened and heated as it passes through the ironer. The finger guard, which actuates the finger guard safety switch, protects the operator by shutting off the ironer drive motor when pushed. The door panel safety switch protects operating and maintenance personnel by shutting off the ironer drive motor when the panel is removed.

2-3 GAS HEATING SYSTEM

A gas burner inside the heated roll provides the necessary heat. The metallic heated roll absorbs the gas burner flame heat and transfers it to the flatwork. Riding against the heated roll, a thermostat contact shoe continually provides heated roll surface temperature information for the ironer control circuitry. The gas intake then automatically is adjusted to provide the heat selected by the operator. The gas burner itself consists of a round tube approximately the length of the heated roll, on which is mounted burner tips. The gas enters at the left side of the flatwork ironer, to be precisely metered by an electrically controlled valve. A spark is created over the first burner tip. In a matter of seconds, the flame just ignited will travel to the farthest burner tip and there will activate a temperature sensing device to “PROVE THE FLAME” to the control circuitry. If clogged burner tips, low gas pressure or other malfunctions prevent the flame from reaching the temperature sensing device (or if any of the described operations fail), designed-in safety devices will shut down the burner.

2-4 AUTOMATIC MONITORING SYSTEM

The automatic monitoring system is installed on all gas and electrically heated flatwork ironers. After the machine has been started, set the thermostat to the desired temperature. When the green pilot light is illuminated, the machine is ready to process flatwork. If the machine is left unattended for twenty minutes, the heat source will shut down. This is indicated by a red light. To reactivate the heat source, the switch on the feed table must be actuated. When the green light is again illuminated, the machine is again ready to process flatwork. This system will prevent unnecessary depreciation of the ironer and greatly extend the useful life of the textile parts.

2-5 ELECTRIC HEATING SYSTEM

U-shaped electric heating elements, approximately the length of the ironing surface are secured inside the heated roll by a plate located on the right hand end of the heated roll. The air inside the heated roll is radiantly heated by the heating elements. The metallic heated roll absorbs the heat created by these heaters and transfers it to the flatwork. The thermostat contact shoe riding against the heated roll provides heated roll temperature information for the control circuitry. Electric power through the heater contractors is automatically adjusted to provide the heat selected by the operator.

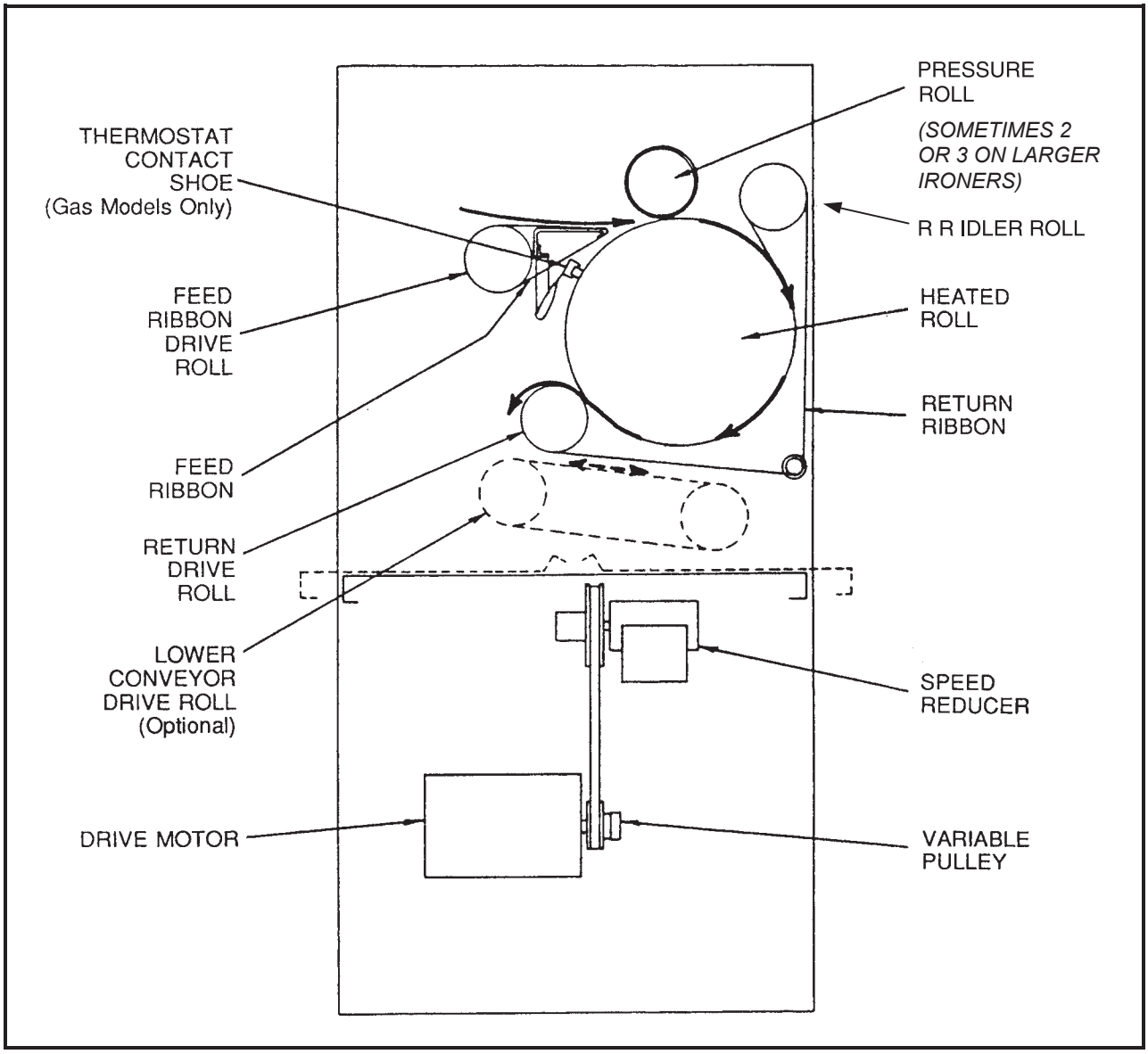

FIGURE 2–1 ROUTING DIAGRAM

2-6 STEAM HEATING SYSTEM

Steam under pressure at 125 PSI provides the heat needed by the ironer to properly process flatwork. Fed into the heated roll through a rotary pressure union, the steam dispenses heat to the roll surface and, in turn, to the flatwork.

2-7 OPTIONAL BUILT-IN PRIMARY FOLDER - 16”, 20”, 24”, 30” and 36” Models

A folding and transfer conveyor provide a primary accordion fold that is 18” (46 cm) wide. The folding conveyor is driven by clutches, which are connected by roller chain and sprockets, to the main drive system. The clutches are connected to two shafts, which are turning in opposite directions.

The Finish Master folds the flatwork one piece at a time. The flatwork is discharged from the ironer section onto the folding conveyor by the return ribbons. As the flatwork leaves the transfer conveyor and falls onto the folding conveyor, signal switches are activated which energize the switches located at each end of the folding conveyor. When the leading edge of flatwork activates the first set of folding conveyor switches, the clutch is energized, thereby reversing the

direction of the folding conveyor and making the first fold. As the tail end of the flatwork continues to leave the transfer conveyor while the front end of the flatwork is passing underneath in the opposite direction, a second fold is made. When the edge of the flatwork activates the second set of folding conveyor switches, the clutches again reverse the direction of the folding conveyor, making the third fold. This third fold may not be made if the flatwork is not large enough.

For optimal operation, leave adequate spacing between sheets.

Minor adjustments may be made to the switch location to allow for variances in flatwork sizes. Toggle switches located on the front of the ironer also allow the operator to turn off the folder and to select front or rear delivery of the ironed flatwork.

2-8 OPTIONAL MOMENTARY STOP PEDAL

An optional momentary stop pedal is available on many models. A foot pedal is mounted on the front tie rod between the machine frames. The foot pedal enables the operator to momentarily stop the rotation of the ironer by activating the foot pedal. Flatwork may be adjusted or straightened while the foot pedal is depressed. To resume feeding of flatwork, release the foot pedal. Avoid continual foot pressure on the pedal, as prolonged stoppage of the heated roll will cause some types of flatwork to melt. Note that the heat circuit is also interrupted each time the foot pedal is depressed.

SECTION 3 – OPERATION

3-1 START UP

Procedures for starting the flatwork ironer depend upon whether it is gas or electric. For gas heat, refer to 3-1A; for electric heat, refer to 3-1B; for steam heat, refer to 3-1C.

3-1A GAS HEATED MODELS

Although the flatwork ironer has been designed for simplicity of operation, certain steps must be taken to assure smooth, efficient operation. Follow these steps to start the ironer:

1. Check that the flatwork is properly prepared (50% moisture content maximum for cottons, 25% for blends).

NOTE: HEAT BUILD-UP CAN DAMAGE THE UNIT IF ALLOWED TO CONTINUE. KEEP THE IRONER IN OPERATION TO AVOID PROLONGED HEAT BUILD-UP.

2. Arrange work close to the operator for convenient feeding.
3. Check that the circuit breaker for the ironer is turned on; then press the start button to energize the drive systems and vent system blower motor.
4. Check that the motor rotation is correct, moving feed ribbons into the rollers. Also check that the canopy blower motor rotation is correct, discharging air from the top of the ironer to the outside of the building.
5. Open the gas cock in the line delivering gas to the ironer.
6. Set the thermostat for the desired operating temperature (usually between 325˚F and 375˚F).
7. Check that the burner is lit by looking through the 'site glass' hole in the left-hand door panel.
8. Warm up the ironer for approximately ten minutes. The green light will illuminate when the machine is ready to process flatwork.

⚠ WARNING

IF MATERIAL IS CAUGHT OR JAMMED IN AN OPERATING MACHINE, SHUT DOWN THE MACHINE IMMEDIATELY. DO NOT ATTEMPT TO REMOVE JAMMED MATERIAL FROM AN OPERATING MACHINE. DISCONNECT POWER AT THE CIRCUIT BOX AND WAIT UNTIL THE MACHINE IS COOL BEFORE ATTEMPTING TO FREE JAMMED MATERIAL FROM THE MACHINE.

3-1B ELECTRICALLY HEATED MODELS

Although the ironer has been designed for simplicity of operation, certain steps must be taken to assure smooth, efficient operation. Follow these steps to start the machine:

1. Check that the flatwork is properly prepared (50% moisture content maximum for cottons, 25% for blends).
2. Arrange the work close to the operator for convenient feeding.
3. Check that the circuit breaker for the ironer is turned on; then press the start button to energize the drive system, vent system blower motor (if equipped), and the electric heating elements.

NOTE: HEAT BUILD-UP CAN SHORTEN FLATWORK IRONER LIFE IF ALLOWED TO CONTINUE. KEEP MACHINE BUSY TO AVOID PROLONGED HEAT BUILD-UP.

4. Check that the drive motor rotation is correct, moving the feed ribbons into the rollers.
5. Set the thermostat for the desired operating temperature (usually between 325˚F and 375˚F, 175˚C and 185˚C).
6. Warm up ironer for approximately 10 minutes. The green light will indicate when the ironer is ready to process flatwork. (NOTE: Machines operating 380V or 415V will take slightly longer to heat up).
7. Adjust speed control knob for desired speed if equipped.

⚠ WARNING

IF MATERIAL IS CAUGHT OR JAMMED IN AN OPERATING MACHINE, SHUT DOWN, AND TAG THE MACHINE IMMEDIATELY. DO NOT ATTEMPT TO REMOVE JAMMED MATERIAL FROM AN OPERATING MACHINE. DISCONNECT POWER AT THE CIRCUIT BOX AND WAIT FOR MACHINE TO COOL BEFORE ATTEMPTING TO FREE MATERIAL FROM THE MACHINE.

3-1C STEAM HEATED MODELS

Although the ironer has been designed for simplicity of operation, certain steps must be taken to assure smooth, efficient operation. Follow these steps to start the ironer:

1. Check that the flatwork is properly prepared (50% moisture content maximum for cottons, 25% for blends).

NOTE: HEAT BUILD-UP CAN SHORTEN THE LIFE OF THE IRONER IF ALLOWED TO CONTINUE. KEEP THE IRONER BUSY TO AVOID PROLONGED HEAT BUILD-UP.

2. Arrange work close to the operator for convenient feeding.
3. Check that the circuit breaker for the ironer is turned on; then press the start button to energize the ironer drive system motor and vent system motor.

3-2 OPERATING PROCEDURE

NOTE: PROPER EXTRACTION AND PREPARATION OF WORK TO BE IRONED IS OF GREAT IMPORTANCE. ALL COTTON FLATWORK MUST BE EXTRACTED TO A MAXIMUM MOISTURE RETENTION OF 50%. (A TEN POUND BONE DRY LOAD OF FLATWORK WILL WEIGH FIFTEEN POUNDS OR LESS AFTER PROPER EXTRACTION). BLEND FLATWORK (POLYESTER/COTTON) MUST BE EXTRACTED TO A MAXIMUM MOISTURE RETENTION OF 25%. (A TEN POUND BONE DRY LOAD OF BLENDED FLATWORK WILL WEIGH TWELVE AND ONE HALF POUNDS OR LESS AFTER PROPER EXTRACTION).

Recommended operating procedures for the ironer vary slightly according to application and requirements.

Flatwork preparation hints:

1. Before ironing, sort the laundry according to fabric type and size. Spread the large items out across a basket or table so that they can be easily grabbed by the operators. Well sorted laundry is a must for high ironing performance.
2. Flatwork with fringe trimming should have the fringe pulled out before ironing.
3. If you are unable to determine the type of fabric you are ironing, test a small piece first using lower temperatures.

4. Fabric moistures and ironing temperatures: Laundry must have the right moisture retention and the ironer must be set at the proper temperature so that all fabrics can be ironed after the ironing process. We recommend that the final wash rinse be hot water and final extraction be ten minutes. However, always observe the care instructions of the materials you are ironing.

Below is a table giving the suggested ironing temperatures and moisture retention for various types of material:

MATERIAL	MOISTURE RETENTION	FINISHING TEMPERATURE
Synthetics or man made fibers Artificial silks, acetate, and acetate fiber	10 – 15%	80-100 degrees C 180-210 degrees F
Rayon and rayon staple Silk Wool (Iron between moist cloth)	10 – 15%	100-150 degrees C 210-300 degrees F
Polyester	10 – 15%	135-160 degrees C 275-325 degrees F
Polyester – Cotton Blend	20 – 25%	150-175 degrees C 310-350 degrees F
Cotton Linen	50%	165-190 degrees C 330-380 degrees F

5. Feeding Suggestions:

   a. Place the flatwork straight across the feed ribbons. Smooth the flatwork during ironing from the middle outward. Do not pull against the machine.

   b. Make sure that you always use the full length of the ironer, as any non-uniform use will cause scorching and unsatisfactory performance.

   c. Items may be folded once, but will likely require two passes through the ironer to become dry. After the first pass is completed, pick up the trailing edge of the flatwork from the receiving table and feed that end first for the second pass.

   d. All flatwork, when possible should be fed selvage first. In other words, flatwork should be fed so that the hems are perpendicular to the length of the ironer.

   e. Round cloths should be centered across the front of the ironer before being fed in flat. This will prevent the round flatwork from going beyond the ironing width. To do this, fold the round in half so you can determine its total length. Now line it up so that both ends fit within the ironing width. Have each operator hold the end with one hand and use the other to reach toward the middle of the cloth and feed that end into the ironer.

OPERATING PROCEDURE:

1. Start ironer following procedures in paragraphs 3-1.
2. Lay flatwork on top of the feed ribbons evenly and parallel to feed roll.
3. Allow roller tapes to carry flatwork through the machine.

NOTE: PRODUCTION CAN BE INCREASED BY PRE-DRYING WORK TO BE IRONED IN A HEATED TUMBLER DRYER. CAREFUL CONTROL OF PRE-DRYING IS ESSENTIAL TO PREVENT OVER DRYING WHICH MAY RESULT IN POOR QUALITY.

4. Receive complete work at the front table (some models allow for rear delivery).

NOTE: DOUBLE-THICKNESS ITEMS SUCH AS PILLOWCASES MAY REQUIRE A SECOND PASS THROUGH THE IRONER.

5. Briefly inspect the condition of the ironed flatwork.

NOTE: MOST FAULTS WILL SHOW UP IN POORLY IRONED WORK. SEE TROUBLESHOOTING SECTION OF THIS MANUAL FOR SYMPTOMS, PROBABLE CAUSES, AND REMEDIES FOR COMMON IRONER FAILURES.

⚠ WARNING

IF MATERIAL IS CAUGHT OR JAMMED IN AN OPERATING MACHINE, SHUT THE MACHINE DOWN IMMEDIATELY. DO NOT ATTEMPT TO REMOVE JAMMED MATERIAL FROM AN OPERATING MACHINE. DISCONNECT POWER AT THE CIRCUIT BOX, LOCK AND TAG BEFORE ATTEMPTING TO FREE MATERIAL FROM THE MACHINE. BE SURE THAT THE MACHINE IS COOL BEFORE ATTEMPTING TO REMOVE JAMMED MATERIAL.

3-3 SHUT DOWN PROCEDURE

To obtain long life and reliability from the flatwork ironer, use the following procedure when shutting down the machine.

1. On gas or electric heated machines, set the thermostat dial to the off position.
2. Allow ironer drive system to operate approximately 20 minutes for heat dissipation.
3. Push emergency stop bar or pull stop cable to shut off drive and canopy blower motor.

IMPORTANT: PROLONGED HEAT BUILD-UP WITHIN THE IRONER CAN SHORTEN THE LIFE OF RIBBONS, PADDING, AND OTHER COMPONENTS. USE COMPLETE SHUT DOWN PROCEDURE EVEN FOR BRIEF BREAKS AND WORK STOPPAGES.

3-4 WAXING

Only a properly waxed ironer will consistently produce high quality ironed flatwork without a sticking problem. Under normal operating conditions the waxing procedure should be performed daily, in the morning before using the ironer. You can use powdered wax or Easy Wax liquid spray wax that is provided with your machine. Powdered wax is applied when the ironer is hot; Easy Wax is applied when the ironer is cold.

Follow these steps for Easy Wax spray wax:

1. Apply Easy Wax to your flatwork ironer at room temperature only. Once your ironer is waxed, then turn on the heat. If your ironer is hot, turn off the heat and allow it to cool before applying Easy Wax.
2. When applying, hold the can upright approximately 18” (45 cm) from the surface to be waxed.

WARNING DO NOT SPRAY WAX INTO A FLAME OR OTHER HOT SURFACES.

3. For heated cylinder ironers, spray directly on the revolving cylinder making two passes. For padded roll (chest heated) ironers, spray the revolving padded roll making two or three passes. Wax your ironer approximately every 6 “ironing” hours of use.

Follow these steps for powdered wax:

1. Start the flatwork ironer and allow to heat up.
2. Fold an old sheet in half and allow the folded edge to move a few inches into the machine.
3. Stop ironer before sheet is drawn in.

NOTE: WAX SHOULD BE APPLIED SPARINGLY AND NEVER DIRECTLY TO THE MACHINE. TAKE CARE TO PREVENT WAX FROM FALLING OFF THE SHEET.

4. Sprinkle approximately 1/8 to 1/4 pound of powdered wax inside the folded sheet.
5. Start the ironer and
6. Run the folded, wax sprinkled sheet through the machine10 to 20 times.
7. Repeat step 6 as necessary to cover the entire ironing surface, adding wax to the folded sheet when it becomes limp.

NOTE: THE WAXED, FOLDED SHEET, ONCE PREPARED, WILL WAX THE IRONING SURFACES NUMEROUS TIMES AND NEEDS TO BE REPLACED ONLY WHEN WORN OUT.

3-5 FOLDER OPERATION (If supplied)

The air operated folding system, when set properly, is completely automatic. Adjustments to the switch location and the time delay may be necessary before proceeding with the production of ironed flatwork. (**NOTE:** A water separator must be installed.)

1. Complete the start-up procedures outlined in Section 3-1.
2. Open the valve(s) in the air line supplying air to the ironer.
3. Adjust the air regulator with the gauge to 25-30 PSI. This adjustment must be made for proper folder speed. If pressure is too high, the folder will run too fast and air components may be damaged. If pressure is too low, the folder will fail to keep up with the speed of the ironer.
4. Place folder toggle switch in the on position.
5. Select front or rear delivery with the toggle switch located next to the folder on-off switch.
6. For optimal operation, leave adequate space between sheets. If the folding system fails to function or is not functioning properly, consult the TROUBLE-SHOOTING SECTION of the Maintenance manual.
7. Receive ironed and folded flatwork at the front or rear-receiving table.
8. Be sure to pull each piece completely off the conveyor so that it clears all of the switches.

WARNING

DO NOT ATTEMPT TO ADJUST FOLDER OR FREE JAMMED FLATWORK WHILE THE IRONER IS OPERATING. SHUT THE MACHINE DOWN IMMEDIATELY. DISCONNECT POWER AT THE CIRCUIT BOX BEFORE ATTEMPTING TO FREE MATERIAL FROM THE MACHINE. MAKE SURE THAT THE MACHINE IS COOL BEFORE ATTEMPTING TO REMOVE JAMMED MATERIAL.

3-6 MONITORING SYSTEM (If equipped–gas and electrically heated models only) "INTELATROL I & II"

1. Complete start up procedures.
2. If the ironer is not used for twenty minutes, a red light will light indicating the burner has shut down. To continue production, actuate the feed table switch and reset the thermostat to the desired temperature. (If your ironer has the advanced monitoring system, (Intelatrol II) the drive system will shut off twenty minutes after the heat has shut off. To restart, refer to Start Up section of the manual).
3. Do not process flatwork until the desired temperature is reached.

Advanced Design (Intelatrol II): Standard on the 24", 30", and 36" models, optional on most others, this system not only shuts off the heat source as described above, but also shuts off the ironer's drive system once it has cooled off.

⚠ WARNING

DO NOT ATTEMPT TO ADJUST FOLDER OR FREE JAMMED FLATWORK WHILE THE IRONER IS OPERATING. SHUT THE MACHINE DOWN IMMEDIATELY. DISCONNECT POWER AT THE CIRCUIT BOX BEFORE ATTEMPTING TO FREE MATERIAL FROM THE MACHINE. MAKE SURE THAT THE MACHINE IS COOL BEFORE ATTEMPTING TO REMOVE JAMMED MATERIAL.

3-7 THERMOSTATIC SHOE ASSEMBLY and HIGH LIMIT SHOE ASSEMBLE (gas and electrically heated models only)

1. Make sure these spring-loaded mechanisms are not too tight on the cylinder. These mechanisms may have "tightened" during shipment or parts replacement.
2. These mechanisms should be cleaned almost daily. With power off, use any small brush, and wipe off any lint; dust; or wax build-up on the shoe portion of the assembly.

3-8 FEED RIBBON SHRINKAGE

1. Some locations present more moisture into the feed ribbons than normal (heavy moisture in the linen; moisture in the atmosphere; ironer vented poorly; etc.) If the feed ribbons shrink too quickly, they will move out of position.
2. In the first weeks of operation, make sure the feed ribbons do not get too tight. There should be about an inch of "play" in the feed ribbons. If the ribbons get too tight, make the adjustment by EQUALLY adjusting the feed ribbon drive roll bearing set screw.

REMEMBER TO ORDER

“EASY WAX”

SPRAY WAX

BY THE CASE,

SO YOU DON’T

RUN OUT!

Product Information:

Model #: _____

Serial #: _____

CMV SHARPER FINISH, INC.
4500 Augusta Boulevard • Chicago, Illinois 60651 U.S.A.
Phone (773) 276-4800 • Fax (773) 276-6878
sales@cmvsharperfinish.com